SUBMITTAL FOR APPROVAL

Exxel Pacific, Inc.
201602. - The Cora Apartments (19 W Harrison)

DATE: 6/02/2017
SPEC #: 22 0000
REV #: 0

To: **John Whitlow**
VIA Architecture
1809 7th Avenue, Suite 800
Seattle, WA 98101

From: **Jola Bielecki**
Exxel Pacific, Inc.
323 Telegraph Road
Bellingham, WA 98226

We are transmitting the following **Submittal 22 0000-08 - Common Areas Sink - Activity rm. & Lobby**; Rev 0 item(s) for your review in accordance with the contract specification # 22 0000.

Please review and respond to Jola Bielecki by 6/07/2017 in accordance with the contract documents.

Additional Notes:

Submittal Item	Activity Date	Sent To Arch	Copies	Remarks
Common Areas Sink – Activity rm. & Lobby	6/02/2017	6/02/2017	1	

Sincerely,

Jola Bielecki

EXXEL PACIFIC, INC.
323 Telegraph Road Bellingham, WA 98226

Submittal #	Date Submitted	Reviewed By
22 0000-08	06/02/2017	*J.B.*

- [x] No Exceptions Taken
- [ ] Make Corrections Noted
- [ ] Revise and Resubmit
- [ ] Rejected

This review is for general conformance with contract documents only and does not relieve the subcontractor/ supplier of responsibility for compliance with applicable drawings, specifications and code.

- [ ] Reviewed by consultant- No VIA comments
- [x] Reviewed as noted
- [ ] Revise and Resubmit
- [ ] Rejected
- [ ] Submittal not required – returned without review.

This review is only for general compliance with the design concept of the project and general compliance with the information given in the contract documents. Corrections or comments made on the shop drawings during this review do not relieve the contractor from compliance with requirements of the contract documents and applicable laws, codes and regulations. The contractor remains responsible for confirming and correlating all quantities and dimensions, selecting fabrication means and methods of construction, coordinating his or her work with that of all other trades and performing all work in a safe and satisfactory manner.

VIA Architecture Incorporated
John X Whitlow
By: VIA Architecture Date: 6-19-2017

KOHLER®

Vault™

~~Top-mount~~/ Under-mount Kitchen Sink

K-3894-4

SINK AT LOBBY KITCHENETTE AND ACTIVITY ROOM (6" DEPTH PER ADA), UNDERMOUNT

Features

- Small single bowl.
- 6-inch depth.
- Three faucet holes with one accessory hole to the right.
- 27-inch minimum base cabinet width.
- 25" (635 mm) x 22" (559 mm)

Material

- 18-gauge stainless steel.

Technology

- SilentShield® sound-absorption technology offers quieter performance.

Installation

- ~~Top-mount~~ or under-mount.

Optional Accessories

K-6645 Sink Rack
K-8801 Sink Strainer
1177161 Installation Clip Kit

Components

Product includes:
1130570 Hardware Kit, Self-Rimming

ADA

Codes/Standards

ASME A112.19.3/CSA B45.4
ADA
ICC/ANSI A117.1

KOHLER® One-Year Limited Warranty

See website for detailed warranty information.

SINK AT LOBBY KITCHENETTE AND ACTIVITY ROOM (6" DEPTH PER ADA) UNDERMOUNT

KOHLER®

Vault™

~~Top-mount/~~ Under-mount Kitchen Sink

K-3894-4

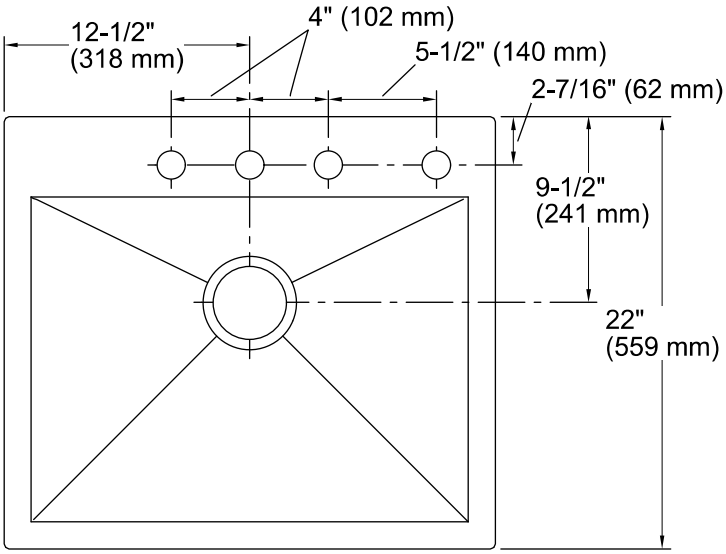

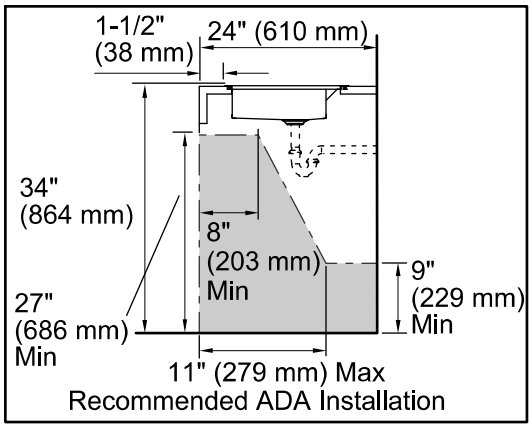

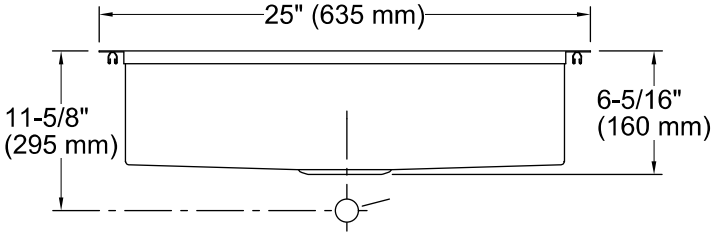

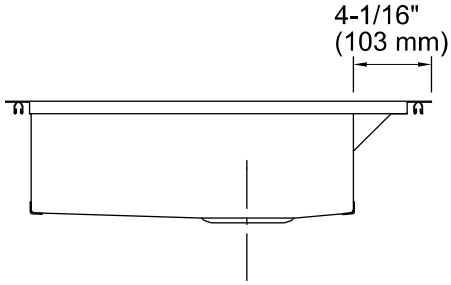

Technical Information

All product dimensions are nominal.

Bowl configuration:	Single
Installation:	~~Top-mount,~~ Under-mount
Bowl area (Only)	Length: 22-1/4" (565 mm) Width: 16-9/16" (420 mm) Bowl depth: 6" (152 mm) Water depth: 6" (152 mm)
Number of deck holes:	4
Faucet hole(s):	1-7/16" (37 mm)
Soap/Lotion hole:	1-7/16" (37 mm)
Drain hole:	3-3/4" (94 mm)
Template:	1130822-7, required, included

Notes

Install this product according to the installation instructions.

Hardward Kit 1177161 needed for countertops with a 2-1/2" (64 mm) thickness or less.

For under-mount installation, counter top thickness can not be greater than 1" (25 mm) for ADA compliance.

ADA compliant when installed to the specific requirements of these regulations.